THEVENIN'S THEOREM

CIRCUIT ANALYSIS METHOD

prepared by:

Gyro A. Madrona

Electronics Engineer

GRADING SYSTEM

FINAL GRADE

30%

PRELIM

30%

MIDTERM

40%

ENDTERM

TERM GRADE

50%

WEEKLY

50%

EXAM

100%

LABORATORY

PENALTY

0

ABSENT

3

45-min LATE

7 max

15-min LATE

TOPIC OUTLINE

Thevenin's Theorem

Thevenin's Equivalent Circuit

- Thevenin's Voltage
- Thevenin's Resistance

THEVENIN'S THEOREM

ARBITRARY NETWORK

It is possible to simplify any **linear** circuit, irrespective of how **complex** it is, to an equivalent circuit with a single voltage source, $\boldsymbol{V_{TH}}$ and a series resistance, $\boldsymbol{R_{TH}}$

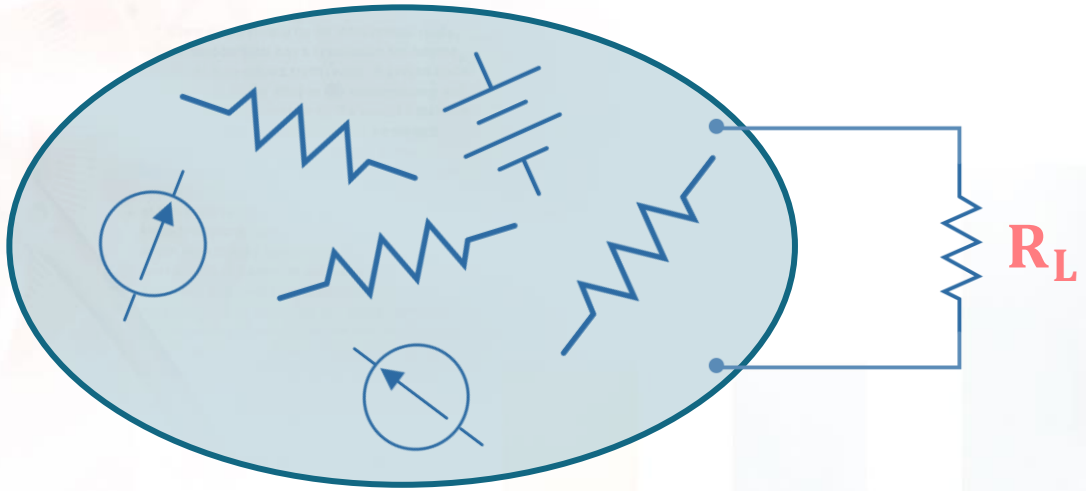

THEVENIN'S EQUIVALENT

It is possible to simplify any **linear** circuit, irrespective of how **complex** it is, to an equivalent circuit with a single voltage source, V_{TH} and a series resistance, R_{TH}

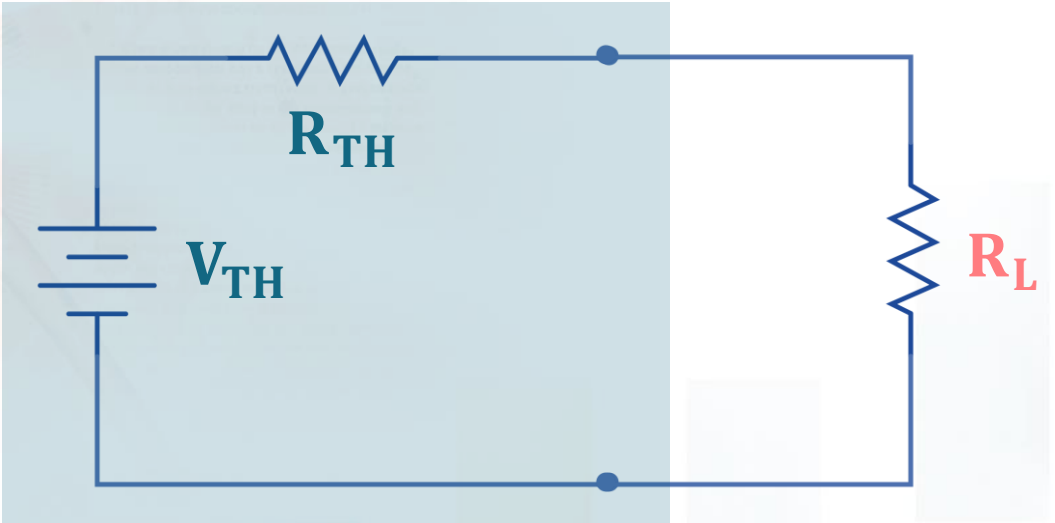

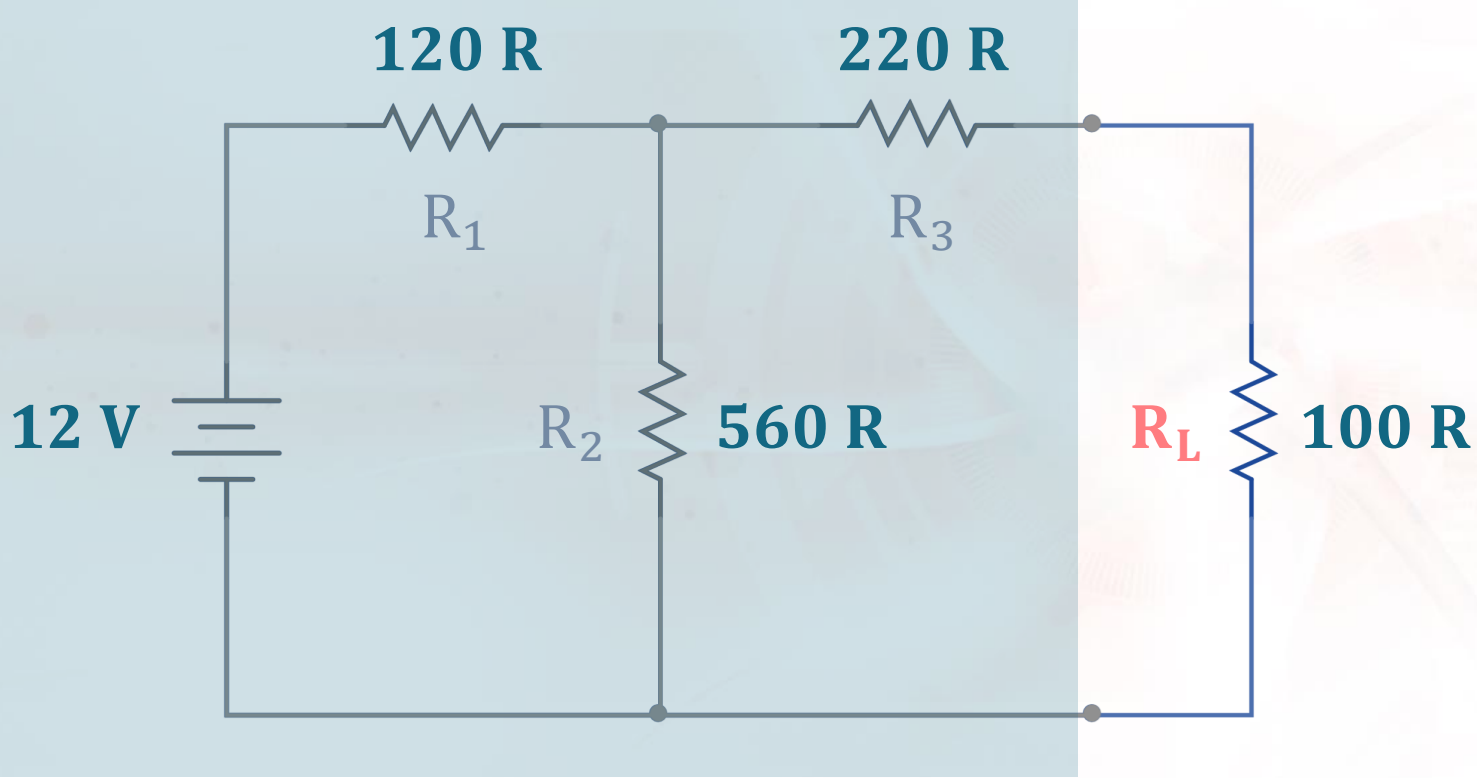
120 R
220 R
R1
R3
12 V
R2
560 R
RL
100 R

THEVENIN'S VOLTAGE, V_{TH}

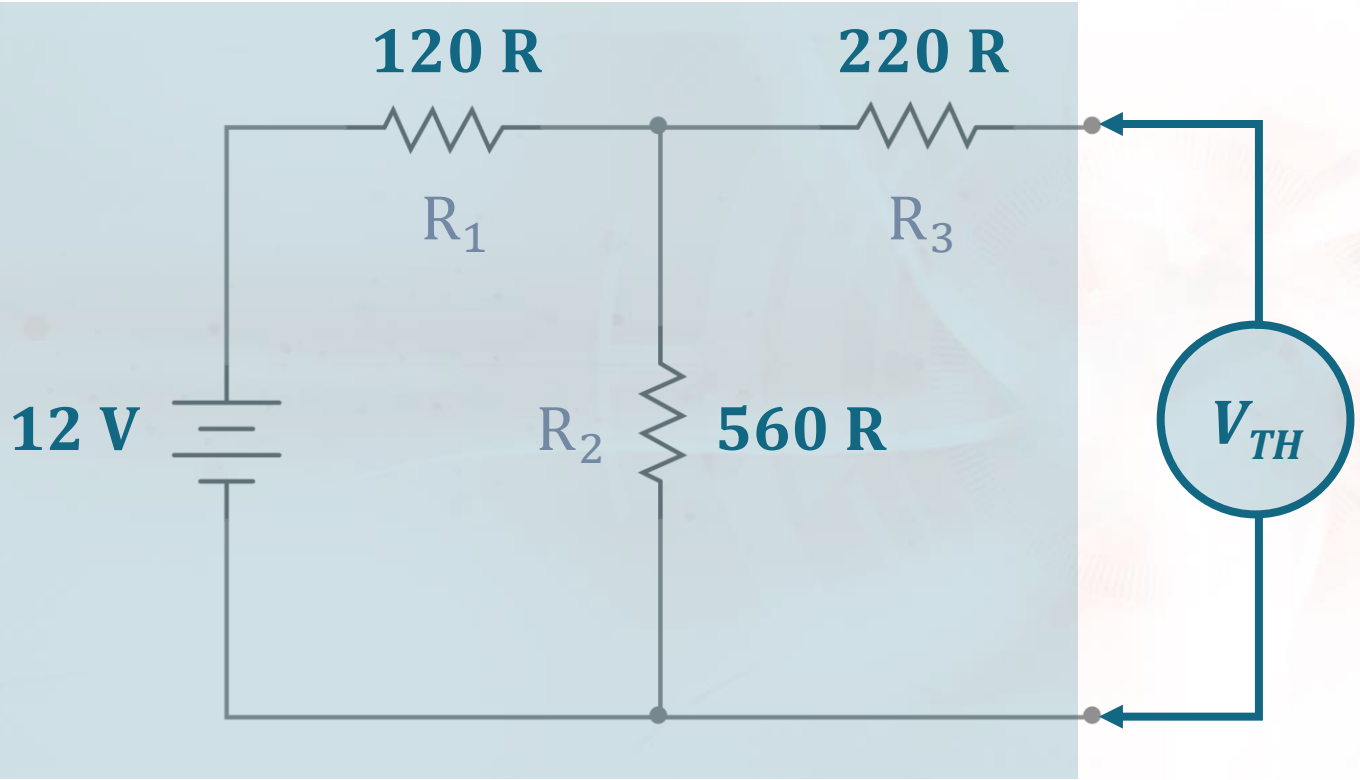

THEVENIN'S RESISTANCE, R_{TH}

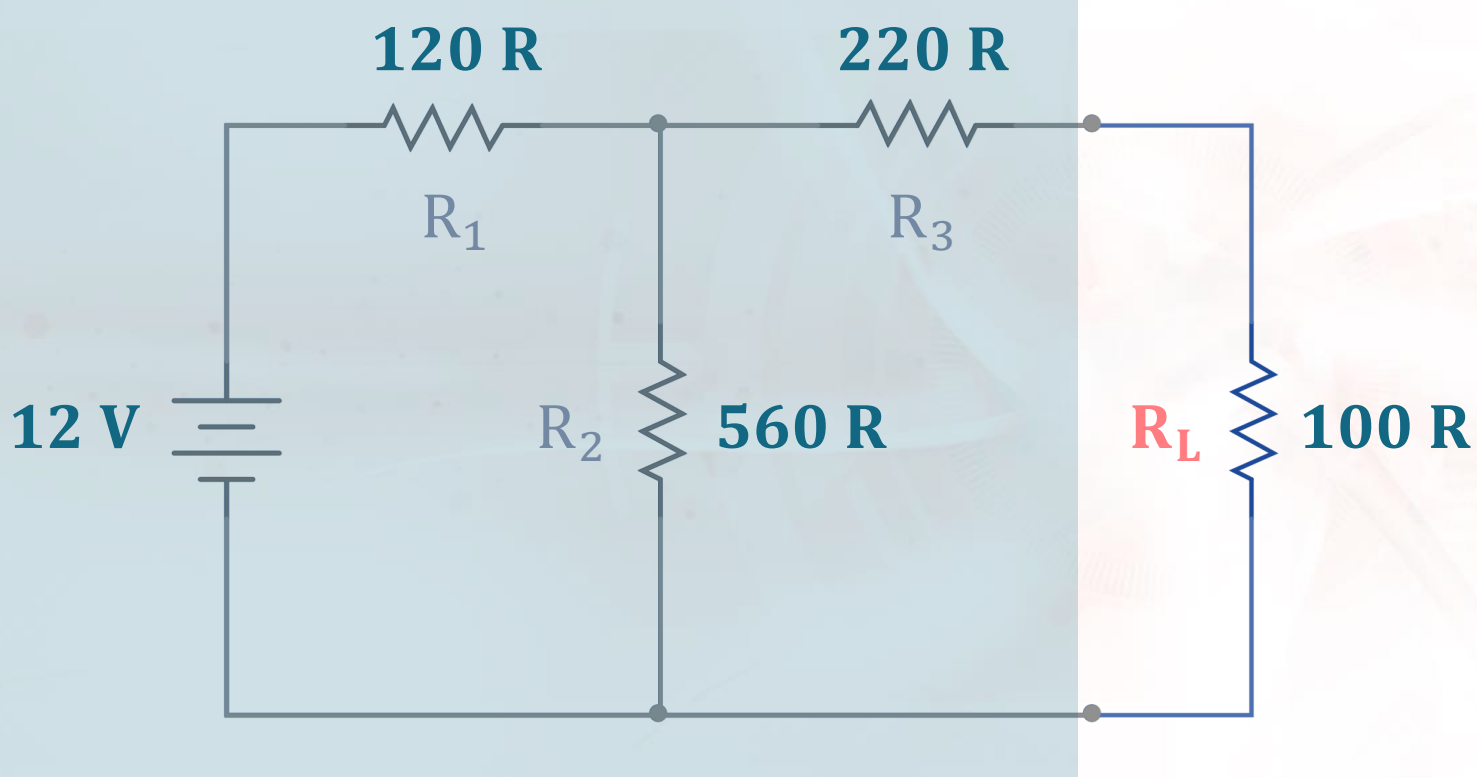

THEVENIN'S RESISTANCE, R_{TH}

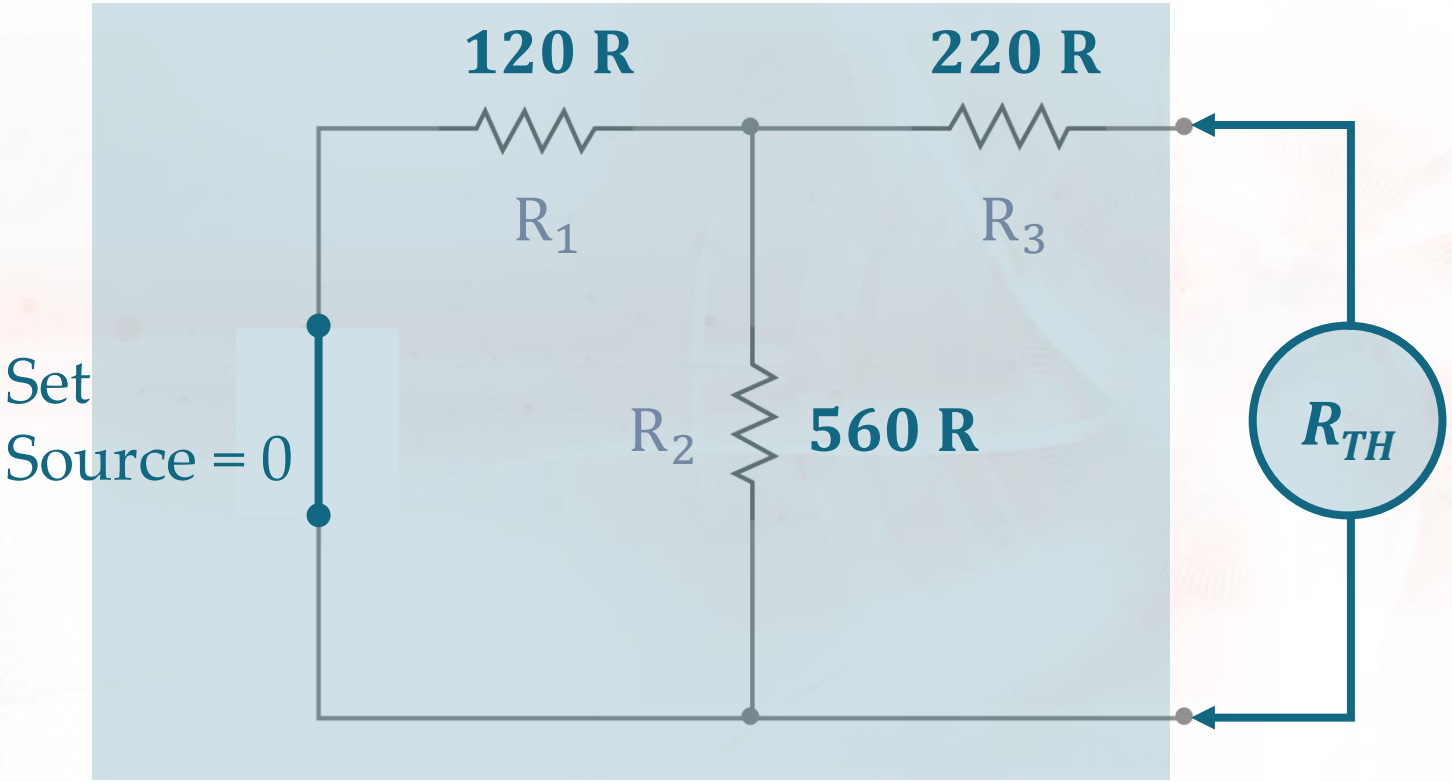

THEVENIN'S EQUIVALENT NETWORK

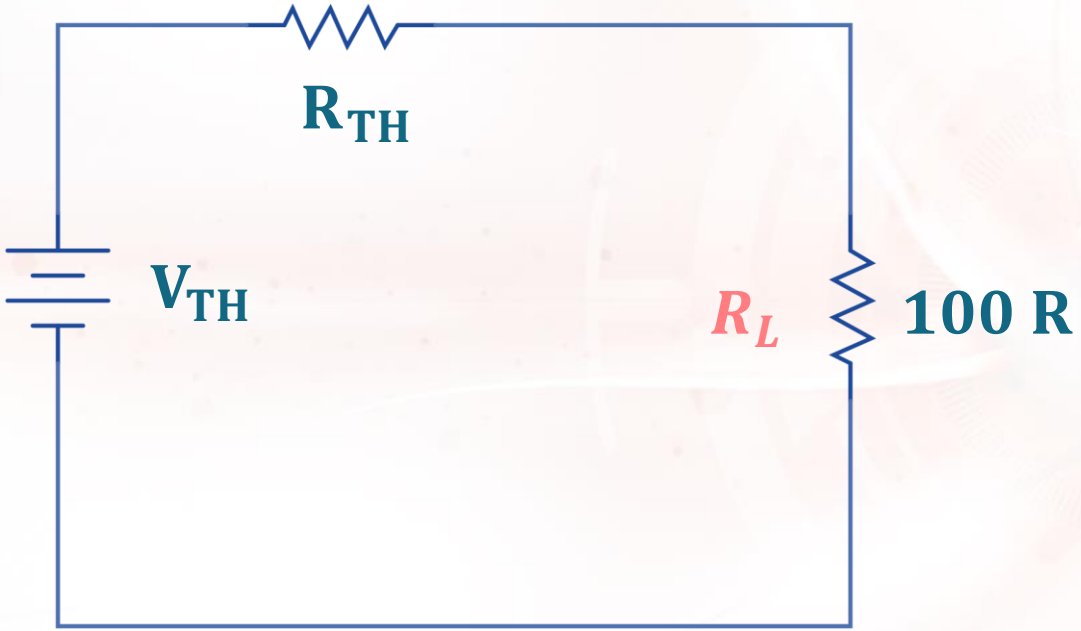

Determine the **current**, **power**, and **voltage** across the **load resistor**, R_L using **Thevenin**'s method.

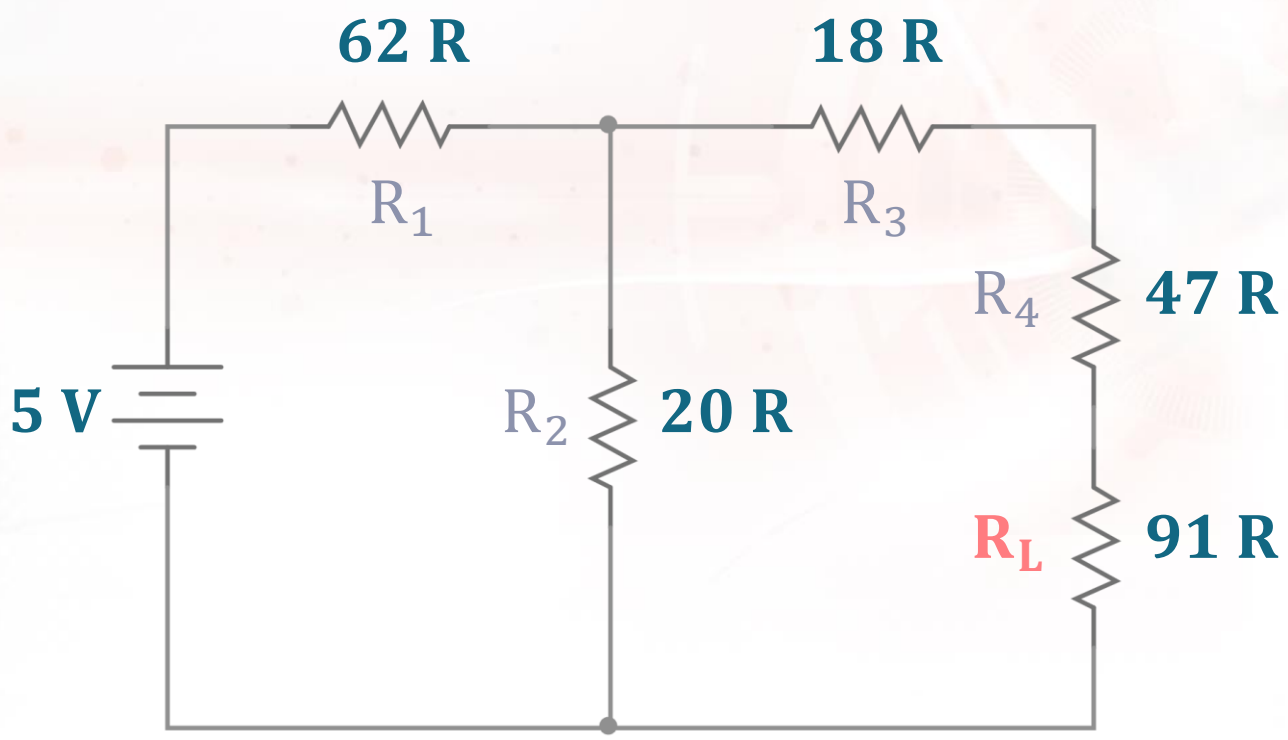

Determine the **current**, **power**, and **voltage** across the **load resistor**, R_L using **Thevenin**'s method.

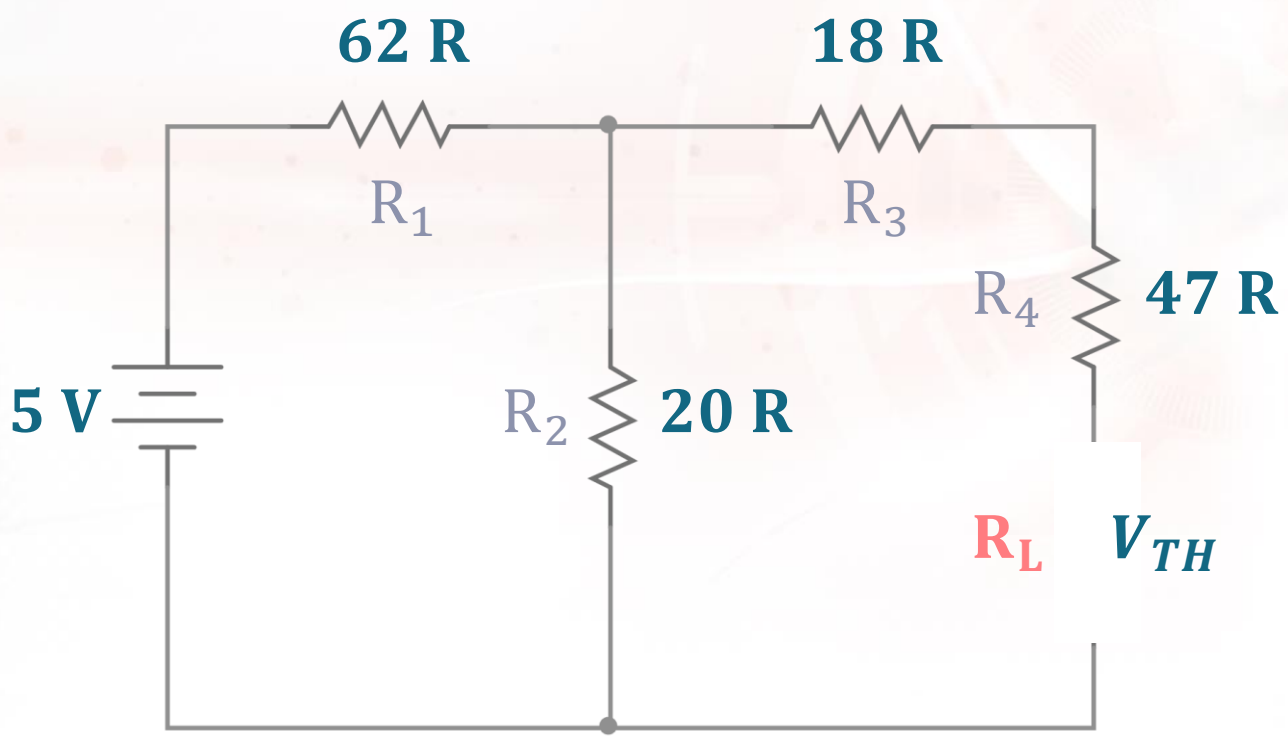

Determine the **current**, **power**, and **voltage** across the **load resistor**, R_L using **Thevenin**'s method.

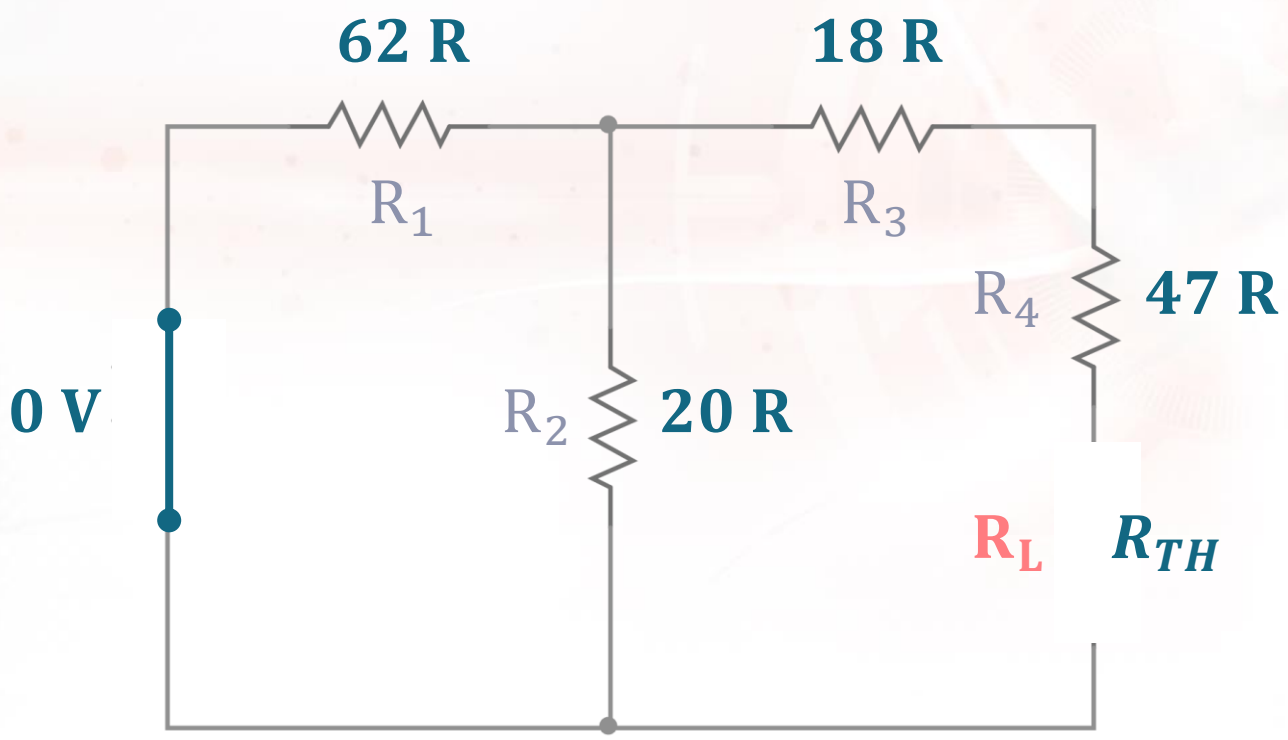

LABORATORY